OptoSupply
Light It Up

Xeon 3 Power Red LED
OSR5XAE3E1E
VER C.0

■Features

- Highest Luminous Flux
- Super energy efficiency
- Long Lifetime Operation
- Superior UV Resistance

■Caution

- Avoid Reflow Soldering Process

■Applications

- Read lights (car, bus, aircraft)
- Portable (flashlight, bicycle)
- Bollards / Security / Garden
- Traffic signaling / Beacons
- In door / Out door Commercial lights
- Automotive Ext

■Outline Dimension

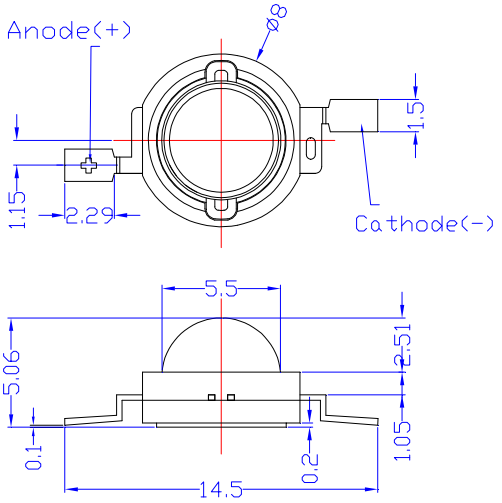

Unit:mm
Tolerances are for reference only

■Absolute Maximum Rating (Ta=25℃)

Item	Symbol	Value	Unit
DC Forward Current	I_F	800	mA
Pulse Forward Current*	I_{FP}	1000	mA
Reverse Voltage	V_R	5	V
Power Dissipation	P_D	2400	mW
Operating Temperature	Topr	-30 ~ +85	℃
Storage Temperature	Tstg	-40~ +100	℃
Lead Soldering Temperature	Tsol	260℃/5sec	-

*Pulse width Max.10ms Duty ratio max 1/10

■Directivity

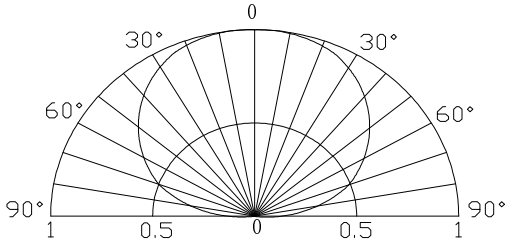

■Electrical -Optical Characteristics (Ta=25℃)

Item	Symbol	Condition	Min.	Typ.	Max.	Unit
DC Forward Voltage	V_F	I_F=350mA	2.0	2.3	3.0	V
		I_F=700mA	2.5	2.8	3.5	V
DC Reverse Current	I_R	V_R=5V	-	-	10	μA
Domi. Wavelength	λ_D	I_F=700mA	620	625	630	nm
Luminous Flux	Φ_V	I_F=700mA	70	80	-	lm
50% Power Angle	$2\theta_{1/2}$	I_F=700mA	-	140	-	deg

■Forward Operating Current (DC)

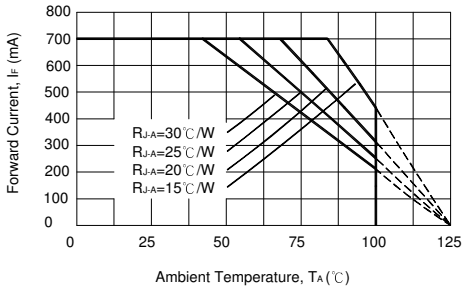

Note: Don't drive at rated current more than 5s without heat sink for Xeon 3 emitter series.

TÜV CERT ISO 9001 : 2000
RWTÜV Certified Company
www.optosupply.com RoHS Compliant EU 2002/95/EC
REACH The new EU chemicals legislation
ATTENTION
OBSERVE PRECAUTIONS
ELECTROSTATIC
SENSITIVE DEVICES