OptoSupply
Light It Up

3mm Round Flangeless LED

OSXXXX3E31B

■Features

- High Luminous LED
- 3mm Round Standard Directivity
- Long Lifetime Operation
- Superior UV Resistance
- Water Clear Type

■Applications

- Electronic Signs And Signals
- Small Area Illuminations
- Back Lighting
- Other Lighting

■Outline Dimension

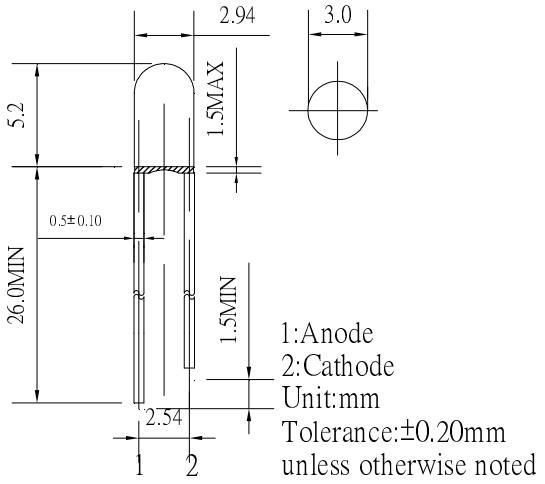

■Absolute Maximum Rating (Ta=25℃)

Item	Symbol	Value		Unit
		W/M/B/PG	R/Y	
DC Forward Current	I_F	30	30	mA
Pulse Forward Current*	I_{FP}	100	100	mA
Reverse Voltage	V_R	5	5	V
Power Dissipation	P_D	102	78	mW
Operating Temperature	Topr	-30 ~ +85		℃
Storage Temperature	Tstg	-40~ +100		℃
Lead Soldering Temperature	Tsol	260℃/5sec		-

*Pulse width Max 0.1ms, Duty ratio max 1/10

■Directivity

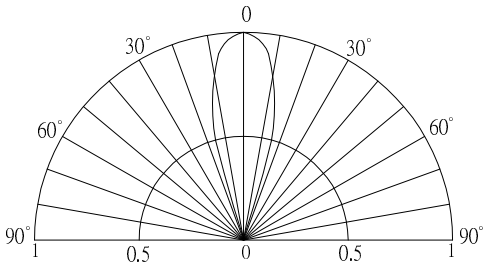

■Electrical -Optical Characteristics (Ta=25℃)

Part Number	Color			V_F (V)			I_R(μA)	Iv(mcd)*			λD(nm)*			2θ1/2(deg)
				Min.	Typ.	Max.	Max.	Min.	Typ.	Max.	Min.	Typ.	Max.	Typ.
				I_F=20mA			V_R=5V	I_F=20mA						
OSW5DK3E31B	White	W		2.7	2.9	3.4	10	7000	8400	-	Typ.X:0.27, Y:0.28			30
OSM5DK3E31B	Warm White	M		2.7	2.9	3.4	10	5800	7000	-	Typ.X:0.45, Y:0.41			30
OSB5SA3E31B	Blue	B		2.7	3.0	3.4	10	2180	3000	-	465	470	475	30
OSG5DA3E31B	Pure Green	PG		2.7	3.0	3.4	10	8400	10000	-	520	525	530	30
OSY5RU3E31B	Yellow	Y		1.8	2.1	2.6	10	1120	1560	-	585	590	595	30
OSY5PA3E31B	Yellow	Y		1.8	2.1	2.6	10	5800	7000	-	585	590	595	30
OSR5RU3E31B	Red	R		1.8	2.1	2.6	10	1120	1560	-	620	625	630	30
OSR5PA3E31B	Red	R		1.8	2.1	2.6	10	5800	7000	-	620	625	630	30

*1 Tolerance of measurements of domi. wavelength is ±1nm
*2 Tolerance of measurements of chromaticity coordinates is ±10%
*3 Tolerance of measurements of luminous intensity is ±15%
*4 Tolerance of measurements of forward voltage is ±0.1V

LED & Application Technologies

CNAS IAF ISO 9001: 2008 RoHS Compliant EU2002/95/EC REACH The new EU chemicals legislation ATTENTION OBSERVE PRECAUTIONS ELECTROSTATIC SENSITIVE DEVICES